Textile Research Journal

http://trj.sagepub.com

A Micromechanical Model for Slit-damaged Braided Fabric Air-beams

John N. Rossettos and Thomas A. Godfrey

Textile Research Journal 2005; 75; 562
DOI: 10.1177/0040517505056873

The online version of this article can be found at:
http://trj.sagepub.com/cgi/content/abstract/75/7/562

Published by:
SAGE Publications
http://www.sagepublications.com

Additional services and information for *Textile Research Journal* can be found at:

Email Alerts: http://trj.sagepub.com/cgi/alerts

Subscriptions: http://trj.sagepub.com/subscriptions

Reprints: http://www.sagepub.com/journalsReprints.nav

Permissions: http://www.sagepub.com/journalsPermissions.nav

Downloaded from http://trj.sagepub.com at US ARMY SOLDIER BIOCHEM COMM on May 7, 2008
© 2005 SAGE Publications. All rights reserved. Not for commercial use or unauthorized distribution.

A Micromechanical Model for Slit-damaged Braided Fabric Air-beams

JOHN N. ROSSETTOS[1]

Department of Mechanical, Industrial & Manufacturing Engineering, Northeastern University, Boston, Massachusetts 02115-5096, USA

THOMAS A. GODFREY

Natick Soldier Center, US Army Soldier & Biological Chemical Command, Natick, Massachusetts 01760-5020, USA

ABSTRACT

A micromechanical model has been developed that will allow the study of a slit-damaged braided fabric air-beam structure. As such, the relevant system of non-dimensional ordinary differential equations is derived and solutions are given for the stress concentration near the broken yarns. This knowledge will contribute to the prediction of damage growth and the ability to compare different fabric materials for their damage tolerance. A simplification of the analysis has been shown to be possible when a parameter, e, the ratio of yarn tensions due to inflation to the yarn stiffness is small, approaching zero. In such a case, the equations for the braided fabric can be reduced to those of the plain weave fabric, so that the stress concentrations are the same as those for woven fabrics. As it turns out, an important result of the present analysis is that the stress concentration factor is, in fact, independent of the parameter, e, and the helix angle of the braided fabrics. This means that much of what has been learned in the study of damage in woven fabrics can be used for braided fabrics.

In addition to woven fabric air-beams currently in development and production for large shelters and space structures, a braided fabric air-beam technology has emerged. Much work has already been done in studying damage growth in woven fabrics [1–3, 5], in which the yarns of the weave are oriented normal to one another. Determination of the stress concentration at the end of a slit in the yarns has been used to predict damage growth. In the development of the non-dimensional equations, a parameter has also been identified [2], which may be used to compare different materials as to their damage tolerance.

It would be useful to develop similar technology for braided construction in which the yarns are no longer normal to each other, but are oriented at some angle. Although the construction of curved braided air-beams with some longitudinally stiffened regions is complex, the essence of the beam is a braided tube with a nominal helix angle such that the hoop and longitudinal stresses in the beam are supported by the appropriate components of the yarn tension.

The present paper derives equilibrium equations in terms of appropriate yarn displacements where strains and yarn rotations are assumed small so that terms involving products of displacements are neglected. The complement of the angle between yarns is denoted by, Ψ, so that when $\Psi = 0$ the yarns are normal to each other as in woven fabrics. Also by appropriate non-dimensionalization, a parameter, $e = T/EA$, appears, where T is the yarn tension and EA is a measure of yarn stiffness. Some of the present fabrics yield values of e in the neighborhood of 0.03. When e approaches zero there is a marked decoupling of the governing simultaneous equations, for any value of Ψ. A dramatic simplification occurs for which the structure of the equations is essentially that of the previous woven fabric model, with the implication that stress concentrations due to yarn breaks developed by the braided fabric model are similar to those for woven fabrics.

In the present work the full coupled equations are used to find solutions for various values of e, ranging from 0.0 to 0.10, and values of Ψ in the neighborhood of current airbeam technology of 36° with 25% variations. The results indicate that there is little or no change in stress concentration for the chosen range of values for e and Ψ. This is a significant result since most of the information that has been defined for woven fabric technology can be used for braided fabrics. In the case in which there is a

Textile Res. J. **75**(7), 562–568 (2005) DOI: 10.1177/0040517505056873 © 2005 Sage Publications www.sagepublications.com

Downloaded from http://trj.sagepub.com at US ARMY SOLDIER BIOCHEM COMM on May 7, 2008
© 2005 SAGE Publications. All rights reserved. Not for commercial use or unauthorized distribution.

rubber coating on the air-beam, the increase in stiffness appears in the non-dimensionalized quantities, as indicated in [4]. The non-dimensional equations do not change and the stress concentration is unaffected, so that the conclusions in the present paper remain the same.

Analysis

The sketch in Figure 1, of an element of the beam surface, illustrates the helix angle in relation to the hoop and longitudinal directions. Our purpose is to develop a micromechanical model to study a slit-damaged airbeam structure. As indicated in Figure 2a, the slit consists of aligned consecutive breaks of the I yarns, where the nomenclature of I and II yarns is shown in Figure 2. The II yarns are not interrupted by the slit. Both I and II yarns carry remote tensions, T, due to the inflation-induced hoop and longitudinal stresses in the air-beam.

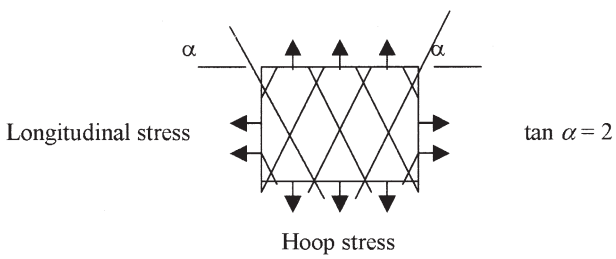

FIGURE 1. An element of the beam surface.

We consider the i-, j-th yarn cross-over point and its immediate neighbors in the braided fabric, as shown in Figure 2b. Equilibrium equations for the cross-over point i, j are easily derived using an approach similar to that taken previously with plain woven fabrics [3]. We first consider the case where no slip occurs at the cross-over point and that rotations and strains in the yarns are small. In contrast to the woven fabric case [3], we now have an oblique angle between the I and II yarns. As a result, it is necessary to consider the y-direction displacement of the cross-over points. This will introduce nonlinear terms in the force equilibrium equations. By assuming that terms involving products of displacements are neglected due to the small rotation and strain assumption, it is possible to derive linearized equations.

Let $u_{i,j}$ and $v_{i,j}$ be yarn cross-over point displacements in the x and y directions. The equilibrium equations, where variations in the x (or j) direction have been averaged (smeared out) as in Reference [3], can be derived in a straightforward manner.

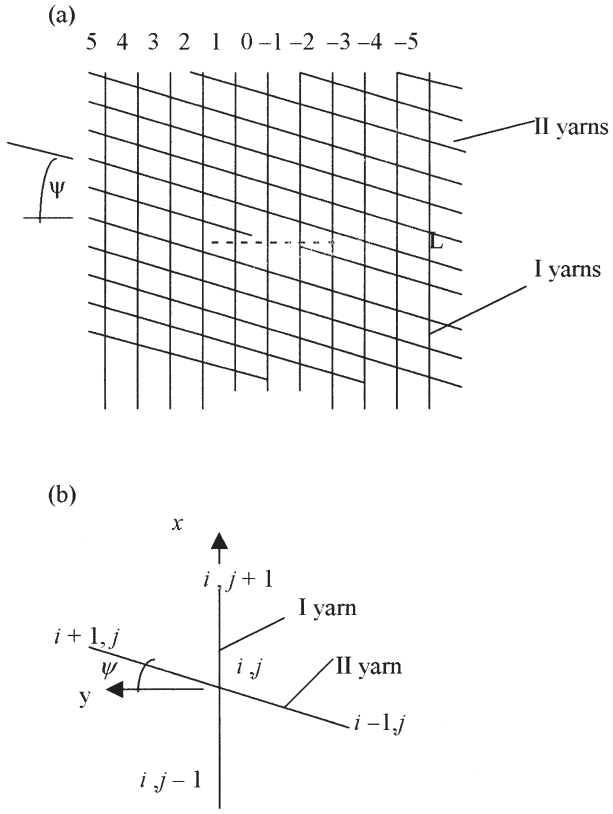

FIGURE 2. (a) Aligned consecutive breaks in the I yarns. (b) The i , j th yarn cross-over point and its immediate neighbors in the braided fabric.

They are:

$$\frac{d^2u_i}{dx^2} + k_1(u_{i+1} - 2u_i + u_{i-1}) + k_2(v_{i+1} - 2v_i + v_{i-1}) = 0 \quad (1)$$

$$\frac{d^2v_i}{dx^2} + k_3(v_{i+1} - 2v_i + v_{i-1}) + k_4(u_{i+1} - 2u_i + u_{i-1}) = 0 \quad (2)$$

where,

$$k_1 = \frac{s^2 + ec^2}{L^2}, \quad k_2 = \frac{(1-e)sc}{L^2}, \quad k_3 = \frac{s^2 + c^2/e}{L^2}, \quad k_4 = \frac{(1/e - 1)sc}{L^2} \quad (3)$$

and $s = \sin\Psi$, $c = \cos\Psi$, $e = T/EA$

where T is the remote tension in the yarns and EA is a measure of yarn stiffness. The nominal angle, Ψ, and

Downloaded from http://trj.sagepub.com at US ARMY SOLDIER BIOCHEM COMM on May 7, 2008
© 2005 SAGE Publications. All rights reserved. Not for commercial use or unauthorized distribution.

yarn spacing, L, are shown in Figure 2. If we define dimensionless quantities ξ, U_i and V_i by

$$x = L\xi/\sqrt{e}, \quad (u_i, v_i) = L\sqrt{e}(U_i, V_i) \tag{4}$$

Equations (1) and (2) become,

$$U_i'' + b_1(U_{i+1} - 2U_i + U_{i-1}) + b_2(V_{i+1} - 2V_i + V_{i-1}) = 0 \tag{5}$$

$$V_i'' + b_3(V_{i+1} - 2V_i + V_{i-1}) + \frac{b_2}{e}(U_{i+1} - 2U_i + U_{i-1}) = 0 \tag{6}$$

where

$$(\,)' = \frac{d(\,)}{d\xi}, \quad b_1 = \frac{s^2 + ec^2}{e} = \frac{k_1 L^2}{e}, \quad b_2 = \left(\frac{1}{e} - 1\right)sc = k_4 L^2, \quad b_3 = \frac{es^2 + c^2}{e^2} \tag{7}$$

Note that b_2 is a coupling parameter. When $\Psi = 0$ as in woven fabrics, $s = 0$, $b_2 = 0$, and the U_i and V_i displacements are de-coupled from equations (5) and (6). For arbitrary values of Ψ, if the quantity $e = T/EA$ is very small, as is the case for materials currently used such as Vectran and Kevlar, then the second and third terms in equation (6) are large in comparison with the first term, which can be dropped, so that we can write

$$V_{i+1} - 2V_i + V_{i-1} = -\frac{s}{c}(U_{i+1} - 2U_i + U_{i-1}) \tag{8}$$

Substituting equation (8) into equation (5) we can eliminate the V_i displacements to get

$$U_i'' + U_{i+1} - 2U_i + U_{i-1} = 0 \tag{9}$$

Equation (9), which is in fact the equation that results when modeling plain weave fabrics [3], implies that, for the case considered, where no slip occurs at the cross-over points, the braided fabric should develop stress concentrations similar to woven fabrics due to yarn breaks. This conclusion, as just indicated, was subject to the restriction that yarn tensions due to inflation are small compared to the yarn stiffness, so that the parameter e is small. In what is to follow, it will be shown that the calculation of the stress concentration for braided fabrics gives the same result as that for woven fabrics for general values of e.

BRAIDED FABRIC MODEL WITHOUT A SLIP REGION

A broken yarn configuration will be studied where the full equations (5) and (6) are to be considered. Solutions will be sought for different values of the parameter $e = T/EA$ to determine its influence on the stress concentration, and compare the results with those predicted when using equation (9) (i.e., $e = 0$, $\Psi = 0$). In this section we do not consider a region where the broken yarns lead to slipping between the I and II yarns. This is treated in another section to ascertain the effect of slipping on the stress concentration factor.

In addition to equations (5) and (6) boundary conditions need to be considered at $x = 0$, where the breaks occur. Suppose the I yarns are numbered as in Figure 2a, so that $i = 0$ is the center yarn where $y = 0$. The n-th yarn is given by $i = n$ in the positive y direction and $i = -n$ in the negative y direction. Then for all broken yarns at $x = 0$, we require that the total load in the yarn at the break is zero, which translates to $du_i(0)/dx = -T/EA = -e$. This result is obtained by noting that the total load in the yarn is $EA\, du_i/dx + T$, where T is the initial load and $EA\, du_i/dx$ is the additional load due to the disturbance (i.e., a break), and this total load must vanish at a break. Using equation (4), this condition can be written in non-dimensional form as $dU_i(0)/d\xi = -1$. Because of zero shear at the broken end, we also have $dV_i(0)/d\xi = 0$.

For all intact yarns, we note that the anti-symmetry which exists along $\xi = 0$, requires that $U_{-n}(0^-) = -U_n(0^+)$ and $V_{-n}(0^-) = -V_n(0^+)$ where, for example in Figure 2a, n is greater than or equal to 2. Also, since all intact yarns are in tension at $\xi = 0$, we also have $U'_{-n}(0^-) = U'_n(0^+)$.

As an example, consider the case of three yarn breaks with two intact yarns on either side as shown in Figure 3, where we assume $U_3 = U_{-3} = 0$, $V_3 = V_{-3} = 0$ so that the active yarns are $n = 0, \pm 1, \pm 2$. The differential equations are given by equations (5) and (6) (where $i = 0, \pm 1, \pm 2$), and represent a system of ten second-order differential equations for the unknown displacements U_i, V_i, ($i = 0, \pm 1, \pm 2$).

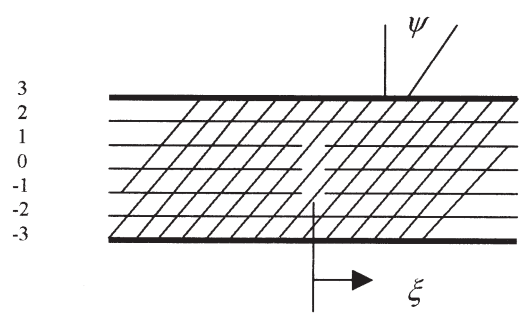

FIGURE 3. Breaks in the I yarns at $\xi = 0$ for yarns $n = 0, +1, -1$. The intact yarns are $n = +2, -2$.

Downloaded from http://trj.sagepub.com at US ARMY SOLDIER BIOCHEM COMM on May 7, 2008
© 2005 SAGE Publications. All rights reserved. Not for commercial use or unauthorized distribution.

Their solution can be written as an eigenvector expansion. In the eigenvector expansion technique the equations are written in matrix form as,

$$d^2\mathbf{U}/d\xi^2 - \mathbf{A}\,\mathbf{U} = 0,\ \mathbf{U}^{\mathbf{T}} = [U_2, U_1, U_0, U_{-1}, U_{-2}, V_2, V_1, V_0, V_{-1}, V_{-2}] \quad (10)$$

where $\mathbf{A}$ is an appropriate matrix consistent with the solution vector, $\mathbf{U}$. Since the equations have constant coefficients, a solution is assumed in the form $\mathbf{U} = \mathbf{R}e^{\lambda\xi}$ where $\mathbf{R}$ is of the same order as $\mathbf{U}$. Substitution into equation (10) gives $\mathbf{AR} = \lambda^2\mathbf{R}$. Using MATLAB, eigenvalues ($l_i = \sqrt{\lambda_i^2}$) and corresponding eigenvectors, $\mathbf{r}_i$, are easily obtained. The solution is then given by

$$\mathbf{U} = \sum_{i=1}^{10} c_i \mathbf{r}_i e^{-l_i\xi} \quad (11)$$

where terms with positive exponents are dropped for bounded solutions as $\xi \to 0$. The ten constants of integration, c_i, are determined using appropriate boundary conditions.

The ten boundary conditions at $\xi = 0$ are based on the anti-symmetry which exists. This can be seen by noting that the yarns are in tension, and rotating Figure 3 by 180° shows that the negative numbered yarns play the same role as the positive numbered yarns. The boundary conditions at $\xi = 0$ are then given by,

$$U_1'(0) = -1,\quad U_0'(0) = -1,\quad U_{-1}'(0) = -1,\quad U_{-2}(0) = -U_2(0),\quad U_{-2}'(0) = U_2'(0)$$

$$V_1'(0) = 0,\quad V_0'(0) = 0,\quad V_{-1}'(0) = 0,\quad V_{-2}(0) = -V_2(0),\quad V_{-2}'(0) = V_2'(0) \quad (12)$$

Once the displacements are found, the stress concentration in the first intact yarn can be calculated. The physical load in the I yarns is denoted by p_i. The non-dimensional load in the i-th I yarn is defined by P_i, where $p_i = TP_i$ (T is the initial tension in the yarn). The total load in the yarn is $p_i = T + EA\ du_i/dx$. On using equation (4), this can be written in terms of non-dimensional quantities as $P_i + 1 + dU_i/d\xi$. For our example, the value of P_2 at $\xi = 0$ (the load in the nearest intact yarn), would represent the stress concentration factor (actually, the load concentration factor; $P_2 = p_2/T$).Our purpose is to evaluate how various values of the parameter, $e = T/EA$ and the angle Ψ affect the stress concentration factor (for our case, P_2 (0)).

The results are given in Figures 4 and 5. In Figure 4, P_2 is plotted against ξ for various values of the angle, Ψ, while the parameter $e = 0.03$ is fixed. While the curves vary over the range of ξ, for different values of Ψ, the stress concentration factor (SCF), as given, $P_2(0)$ is independent of Ψ and has a value of 1.67. In Figure 5, P_2 is plotted against ξ for various values of e, while Ψ is fixed at 30°. It is clear that the parameter e, has a negligible effect throughout the range of ξ. The case of seven breaks (not shown) indicates a similar trend, with an SCF of about 2.54. A similar scenario also occurs with one break, with an SCF of 1.29.

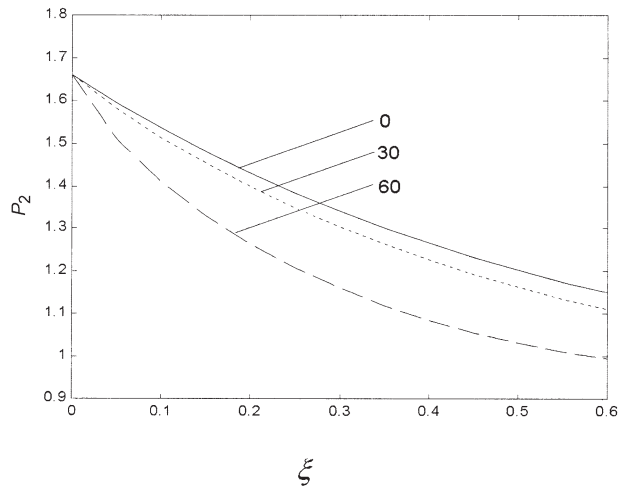

FIGURE 4. P_2 versus ξ for Ψ = 0°, 30°, 60°; e = 0.03.

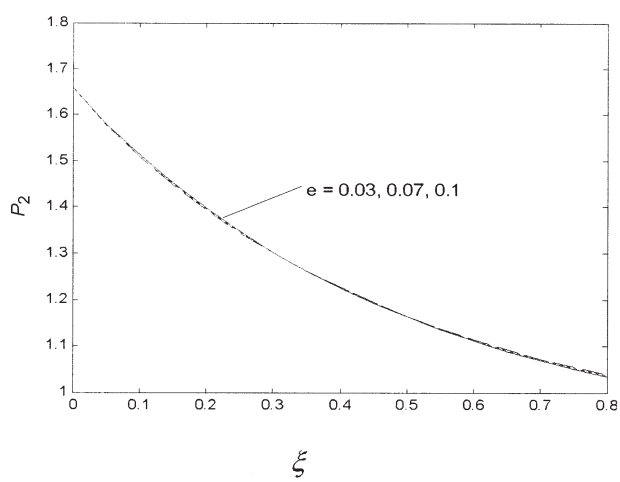

FIGURE 5. P_2 versus ξ for e = 0.03, 0.07, 0.1; Ψ = 30°.

BRAIDED FABRIC MODEL WITH A SLIP REGION

When we include a slip region, where the broken yarns slip, the analysis becomes rather complex. Since our interest is in an initial evaluation of the effect of slip on the SCF (for various values of e and Ψ), we consider the

Downloaded from http://trj.sagepub.com at US ARMY SOLDIER BIOCHEM COMM on May 7, 2008
© 2005 SAGE Publications. All rights reserved. Not for commercial use or unauthorized distribution.

case where only the $n = 0$ yarn is broken (see Figure 6). The $n = 1, -1$ active yarns are intact, and the displacement of yarns $n = 2, -2$ is neglected. We consider slipping of the broken I yarn in the x-direction only. It is assumed that there is negligible slipping in the y-direction. The slipping broken yarn ($n = 0$), will apply a friction force, f, to a given II yarn (crossing yarn), which deflects (dashed curve), so that there are also forces R_1 and R_2 on the II yarn (Figure 6). The tensile force in the II yarn consists of the initial tension, T, and the additional force due to the deflection of the yarn. If we consider the equilibrium of forces and moments of the II yarn in a manner similar to that done for the plain weave fabric configuration [3], R_1 and R_2 can be determined in terms of f and the x and y displacements of the I yarns $n = 1, -1$.

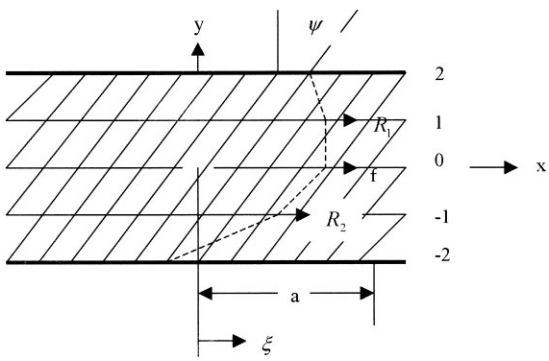

FIGURE 6. Equilibrium of a deflected II yarn (dashed lines) in the slip region.

Products of displacement are neglected with respect to unity. The process is straightforward, and after much algebra, the results are

$$R_1 = -\frac{f}{2} - Ts\left(1 - \frac{a_3}{c}\right) + EAa_4u_1 - \frac{EAe}{2L}u_{-1} + EAa_5v_1$$

$$R_2 = -\frac{f}{2} + Ts\left(1 - \frac{a_3}{c}\right) + EAa_6u_1 + EAa_7u_{-1} + \frac{EAa_3s}{L}v_1 + EAa_2v_{-1} \quad (13)$$

where,

$$a_1 = (e + s^2)/L, \quad a_2 = sc/L, \quad a_3 = 1 - s^2/2, \quad a_4 = a_1 + e/2L - a_3s^2/Lc$$

$$a_5 = a_2 - a_3s/L, \quad a_6 = a_3s^2/Lc - e/2L, \quad a_7 = a_1 + e/2L$$

Recall that L is the distance between yarns, along the yarn (Figure 2). If equilibrium of the I yarns $n = 1, 0, -1$ in the x-direction is considered, where the forces f, R_1 and R_2 on the I yarns (they are in a direction opposite to those shown in Figure 6) are averaged ("smeared") over the unit cell of spacing, L, as in [3], the equations for these yarns are

$$EA\mathrm{d}^2u_0/\mathrm{d}x^2 - f/L = 0, \quad EA\mathrm{d}^2u_1/\mathrm{d}x^2 - R_1/L = 0, \quad EA\mathrm{d}^2u_{-1}/\mathrm{d}x^2 - R_2/L = 0, \quad (14)$$

Equations (14) can be written in non-dimensional form by using equation (4) together with the definition of an additional dimensionless quantity, $\bar{f}$, where $f = e\sqrt{e}EA\bar{f}$. Equations (14) then become,

$$U_1'' - c_1U_1 + U_{-1}/2 - c_2V_1 + \bar{f}/2 = -c_3s/\sqrt{e} \quad (15a)$$

$$U_0'' - \bar{f} = 0 \quad (15b)$$

$$U_{-1}'' - c_4U_1 - c_5U_{-1} - c_6V_1 - c_7V_{-1} + \bar{f}/2 = c_3s/\sqrt{e} \quad (15c)$$

where

$$c_1 = 3/2 + (1 - 1/c)s^2/e, \quad c_2 = (c - 1 + s^2/2)s/e, \quad c_3 = (c - 1 + s^2/2)/c$$

$$c_4 = -1/2 + s^2/ec, \quad c_5 = 3/2 + s^2/e, \quad c_6 = (1 - s^2/2)s/e, \; c_7 = sc/e$$

The governing equations in the slip region consist of equations (15) and (6) ($i = 1, 0, -1$) for V_1, V_0 and V_{-1}. It is noted that, because of our assumptions, the equations for V_1, V_0 and V_{-1} are the same for the so-called slip region ($0 \le x \le a$) (see Figure 6) and the non-slip region ($x \le a$). These equations are not influenced by the slipping I yarn ($n = 0$). Therefore, for the problem in Figure 6, there are nine independent, second-order differential equations, namely, equations (15a, b, c) and equations (5) and (6) for $I = 1, 0, -1$. There will be 18 constants of integration in addition to the unknown $\bar{f}$ for a total of 19 unknowns. When the angle, $\Psi = 0$, these equations reduce exactly to those of a woven fabric and involve only the unknowns, U_1, U_0 and U_{-1}.

If we define a non-dimensional slip extent, α, by $a = (L/\sqrt{e})\alpha$, then the boundary conditions can be formulated as follows. In the slip region ($0 \le \xi \le \alpha$), at $\xi = 0$, the following conditions hold.

$$U_0'(0) = -1, \quad U_{-1}(0) = -U_1(0), \quad U_{-1}'(0) = U_1'(0)$$

$$V_0'(0) = 0, \quad V_{-1}(0) = -V_1(0), \quad V_{-1}'(0) = V_1'(0) \quad (16)$$

Downloaded from http://trj.sagepub.com at US ARMY SOLDIER BIOCHEM COMM on May 7, 2008
© 2005 SAGE Publications. All rights reserved. Not for commercial use or unauthorized distribution.

At $\xi = \alpha$, there are six continuity conditions for the U_i displacements and their derivatives (the solutions for V_1, V_0 and V_{-1} are the same for each region) at the interface between region 1 (slip region) and region 2 (non-slip region). Superscripts denote the region.

$$U_1^1(\alpha) = U_1^2(\alpha), \quad U_1^{1\prime}(\alpha) = U_1^{2\prime}(\alpha), \quad U_0^1(\alpha) = U_0^2(\alpha)$$
$$U_0^{1\prime}(\alpha) = U_0^{2\prime}(\alpha), \quad U_{-1}^{\ 1}(\alpha) = U_{-1}^{\ 2}(\alpha), \quad U_{-1}^{\ 1\prime}(\alpha) = U_{-1}^{\ 2\prime}(\alpha) \quad (17)$$

In the eigenvector expansion, terms with positive exponentials in region 2 are dropped for bounded solutions, so six constants are set equal to zero. There are now only 13 unknowns. Equations (16) and (17) provide 12 conditions. An additional condition comes from the requirement that the frictional traction should be continuous on the I ($n = 0$) yarn across the boundary, $\xi = \alpha$, between the slipping and non-slipping regions. This implies continuity of $d^2 U_0/d\xi^2$ at $\xi = \alpha$. On using equations (15b) and (5) for $i = 0$, this condition becomes

$$b_1(U_1 - 2U_0 + U_{-1}) + b_2(V_1 - 2V_0 + V_{-1}) = -\bar{f} \quad (18)$$

For selected values of slip extent, α, (which defines both regions), solutions are found in each region. Boundary and continuity conditions given by equations (16)–(18) allow calculation of the 13 constants, and therefore, determination of the displacements. The stress concentration in the intact I yarn ($n = 1$) is then given by $P_1(0) = 1 + U_1^{1\prime}(0)$, and is, therefore, found for each value of slip extent, α. In Figures 7 and 8, $P_1(0)$ is plotted against α for different values of the parameter, e, and the angle, Ψ. It is noted that the stress concentration, $P_1(0)$, decreases with increasing slip extent, α. This is consistent with the idea that slip is a dissipative mechanism, analogous to matrix yielding in fiber composite sheets [6, 7]. It is also clearly shown that for a range of values of slip region extent, α, the stress concentration is independent of the parameter, e, and the angle Ψ. In the case of the parameter $e = T/EA$, for a given yarn stiffness, increasing T, and therefore e, would produce higher physical force levels in the yarns. The non-dimensional quantity, $P_1(0)$, is however, a ratio of force levels, which does not change with e. Since it is independent of e, then for very small $e \to 0$, it was shown earlier that the equations for arbitrary values of Ψ could be reduced to those of woven fabrics, where Ψ is identically zero.

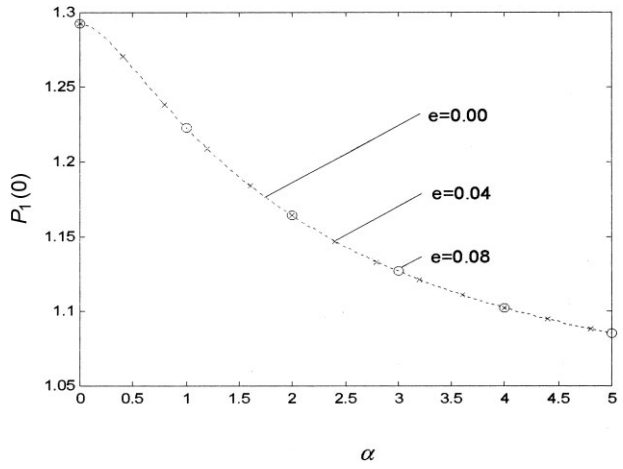

FIGURE 7. $P_1(0)$ versus slip extent α. $e = 0.00, 0.04, 0.08$; $\Psi = 36°$

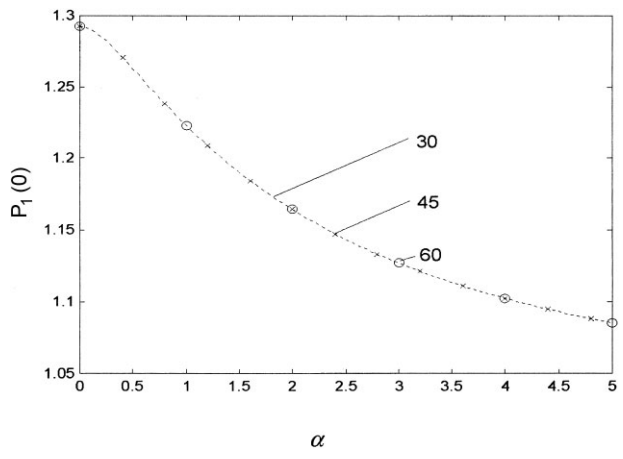

FIGURE 8. $P_1(0)$ versus slip extent α. $\Psi = 30°, 45°, 60°$; $e = 0.03$.

Conclusions

A system of non-dimensional differential equations for yarn displacements has been derived, applicable to slit-damaged, braided fabric air-beam structures. Two quantities appear and play important roles, namely, the parameter $e = T/EA$ (where T is the remote yarn tension due to inflation and EA is a measure of yarn stiffness) and the angle, Ψ, (which is related to the helix angle of the braided tube). The stress concentration near the broken yarns is calculated in the case where broken yarns haven't slipped and in the case where broken yarns slip. Since the stress concentration decreases with an increasing slip region, the maximum value will occur for the non-slip case. For this case it is also shown, analytically, that when $e \to 0$, the equations for braided fabrics, for arbitrary values of Ψ, can be reduced to those of woven fabrics (where $\Psi = 0$), implying that the braided fabric should develop stress concentrations similar to woven fabrics, near yarn breaks.

To obtain results without the restriction of small $e \to 0$, the stress concentration is calculated near a slit (a

Downloaded from http://trj.sagepub.com at US ARMY SOLDIER BIOCHEM COMM on May 7, 2008
© 2005 SAGE Publications. All rights reserved. Not for commercial use or unauthorized distribution.

series of broken yarns) in the fabric, for various values of e and Ψ using the full braided fabric equations. This is done for both the case of no-slip and the case with slip. The results clearly show that the stress concentration in the adjacent intact yarn along the line of yarn breaks is independent of the parameter e, and the angle Ψ. This means that all that has been learned in the study of damage in woven fabrics, will be useful for braided fabric air-beams.

Literature Cited

1. Godfrey, T. A., and Rossettos, J. N., The Onset of Tear Propagation at Slits in Stressed Uncoated Plain Weave Fabrics, *J. App. Mech*. **66,** 926–933 (1999).
2. Godfrey, T. A., and Rossettos, J. N., On a Parameter for Comparing the Damage Tolerance of Stressed Plain Weave Fabrics, *Textile Res. J.* **69,** 503–511 (1999).
3. Godfrey, T. A., and Rossettos, J. N. Damage Growth in Prestressed Plain Weave Fabrics. *Textile Res. J.* **68,** 359–370 (1998).
4. Godfrey, T. A., Rossettos, J. N., and Collins, S. E. The Onset of Tearing at Slits in Stressed Coated Plain Weave Fabrics, *J. App. Mech.* **71,** 879–886 (2004).
5. Rossettos, J. N., and Godfrey, T. A., Effect of Slipping Yarn Friction on Stress Concentration near Yarn Breaks in Woven Fabrics, *Textile Res. J*. **73,** 292–304 (2003)
6. Rossettos, J. N., and Olia, M., On the Hybrid Effect and Matrix Yielding at Fiber Breaks in Hybrid Composite Sheets, *J. Mech. Comp. Matet. and Struct*. **2,** 275–280 (1995)
7. Rossettos, J. N., and Godfrey, T. A., Damage Analysis in Fiber Composite Sheets and Uncoated Woven Fabrics, *ASME Appl. Mech. Rev.* **51,** 373–385 (1998)

Downloaded from http://trj.sagepub.com at US ARMY SOLDIER BIOCHEM COMM on May 7, 2008
© 2005 SAGE Publications. All rights reserved. Not for commercial use or unauthorized distribution.